Spare Part book

TI Element 4

V0- 09-07-2025
V1 – 25-08-2025
V2 – 06- 11-2025
V3 - 27-01-2026

Fluid Management®

FAST & FLUID
THE TINTING COMPANY
www.fast-fluid.com

INDEX

TI Element 4 8700
Dispense bay parts 8701
Inner frame parts 8702
Agitation Unit 8421
Main frame 8703
XDM 1821281-SP 8330
Motorised Brush.....8706
Turntable 8420
Agitation plate 8708
Power supply module CE/UL FM300213-SP 8531-A
Power supply module ASIA FM300214-SP 8531-B
Canisters 8310
Canister 1.3L 8311
Canister 2.3L 8312
Canister 2.3L, Inner 8313
Canister 4.6L 8314
Pump mechanics 8315
TT-drive unit gear FM300207-SP 8707
Heating module 1819274-SP 7470

8700 – TI Element 4

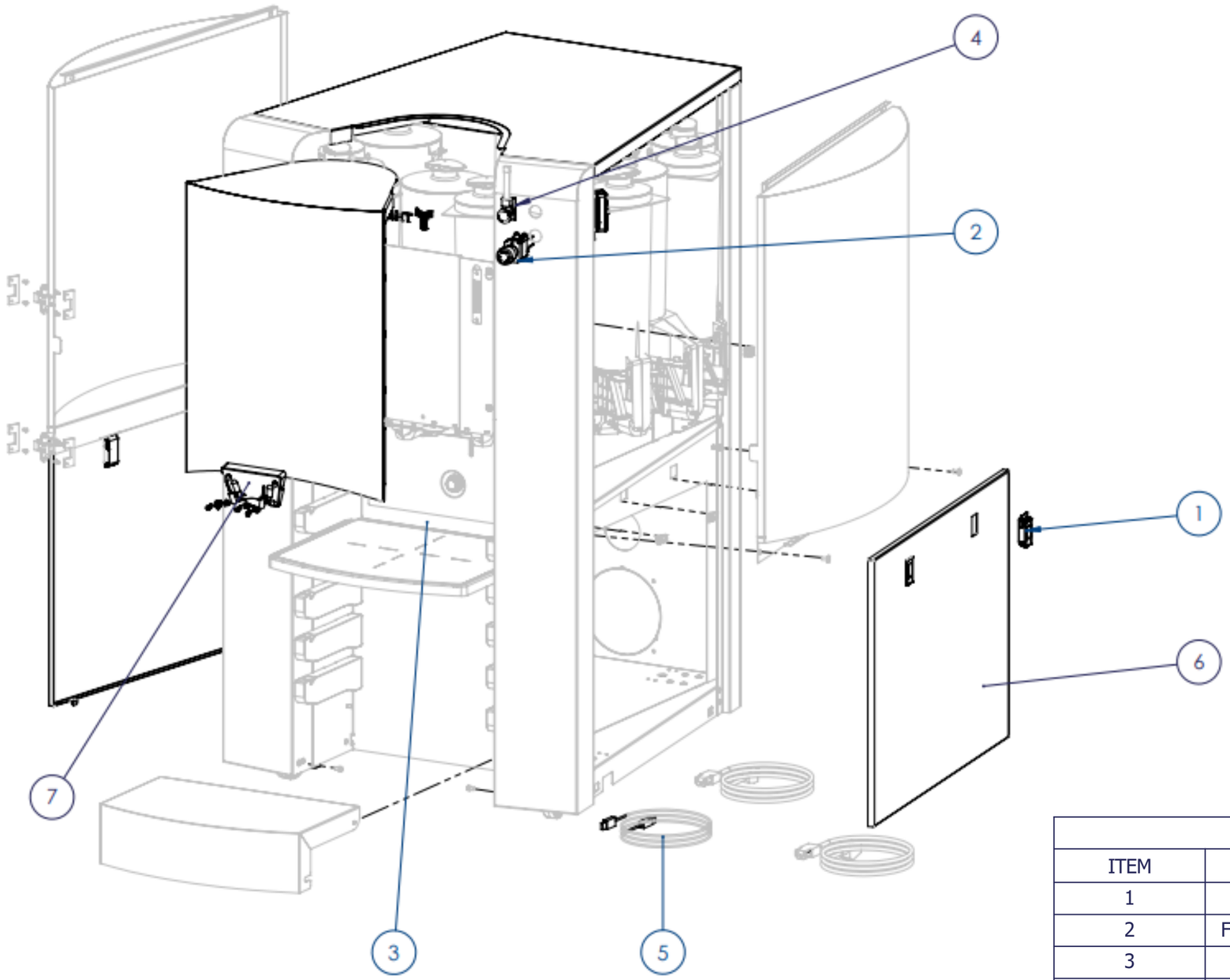

PARTS LIST			
ITEM	PART #	DESCRIPTION	REMARK
1	1862332-SP	Latch,slide,40-525,set 2pcs.	
2	FM300105-SP	EMswitch complete	
3		Dispense bay parts	Page 8701
4	FM300178-SP	Pilot light complete - E4	
5	1817218-SP	cable,USB-Bm,USB-Am	
6	FM300190-SP	Frame,Panel,side,down 2pcs	Water
6	FM300179-SP	Frame,Panel,side,down 2pcs	Solvent
7	FM300351-SP	Can-Pos,laser,module E4	

8701 Dispense bay parts

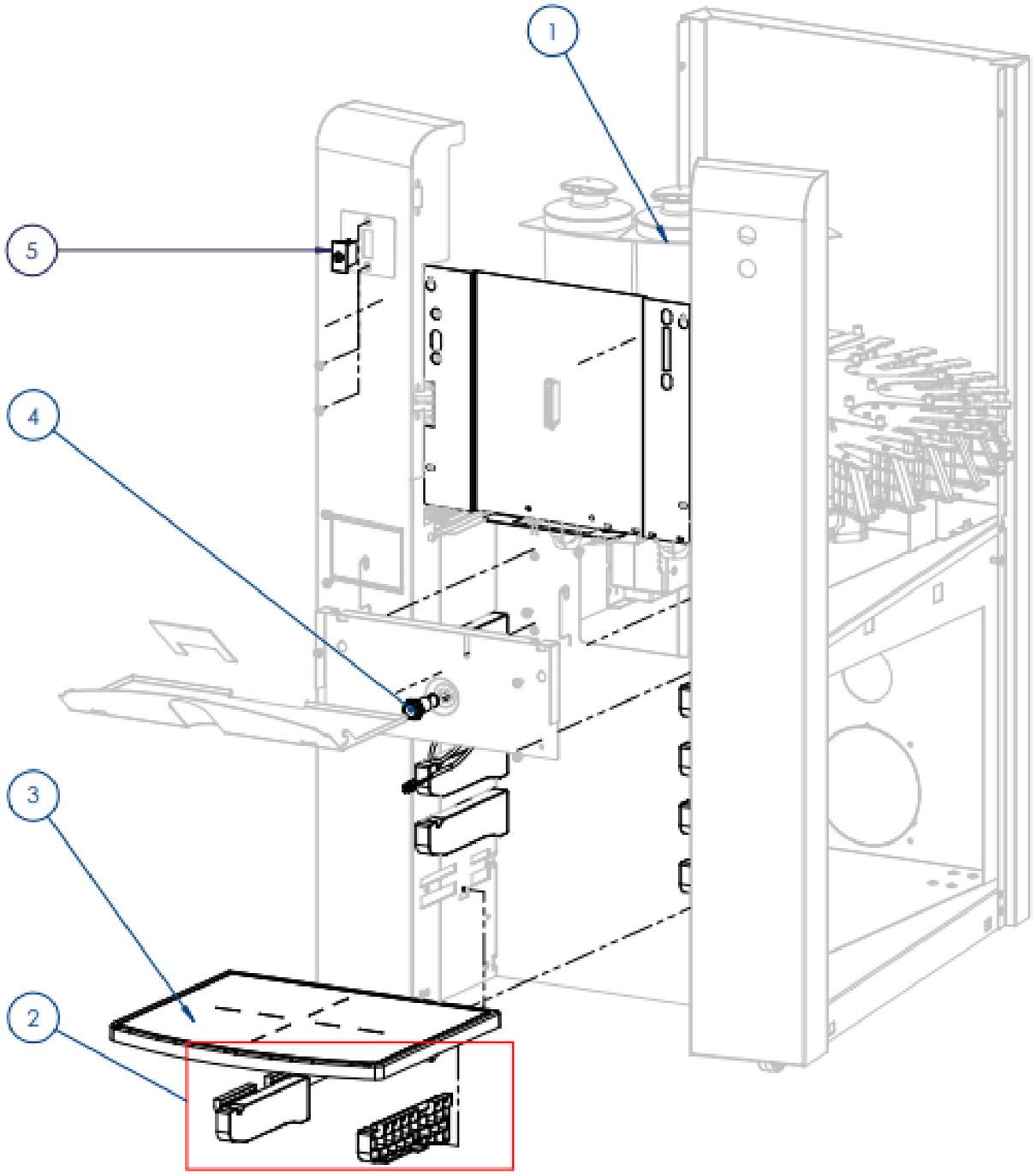

PARTS LIST			
ITEM	PART #	DESCRIPTION	REMARK
1		Inner frame parts	Page 8702
2	1819224-SP	Shelfholder left & right(set 1pc)	
3	FM300211-SP	Can table E4	
4	1818952-SP	Can sensor	
5	FM300349 - SP	Door switch Assy – E4	

8702 Inner frame parts

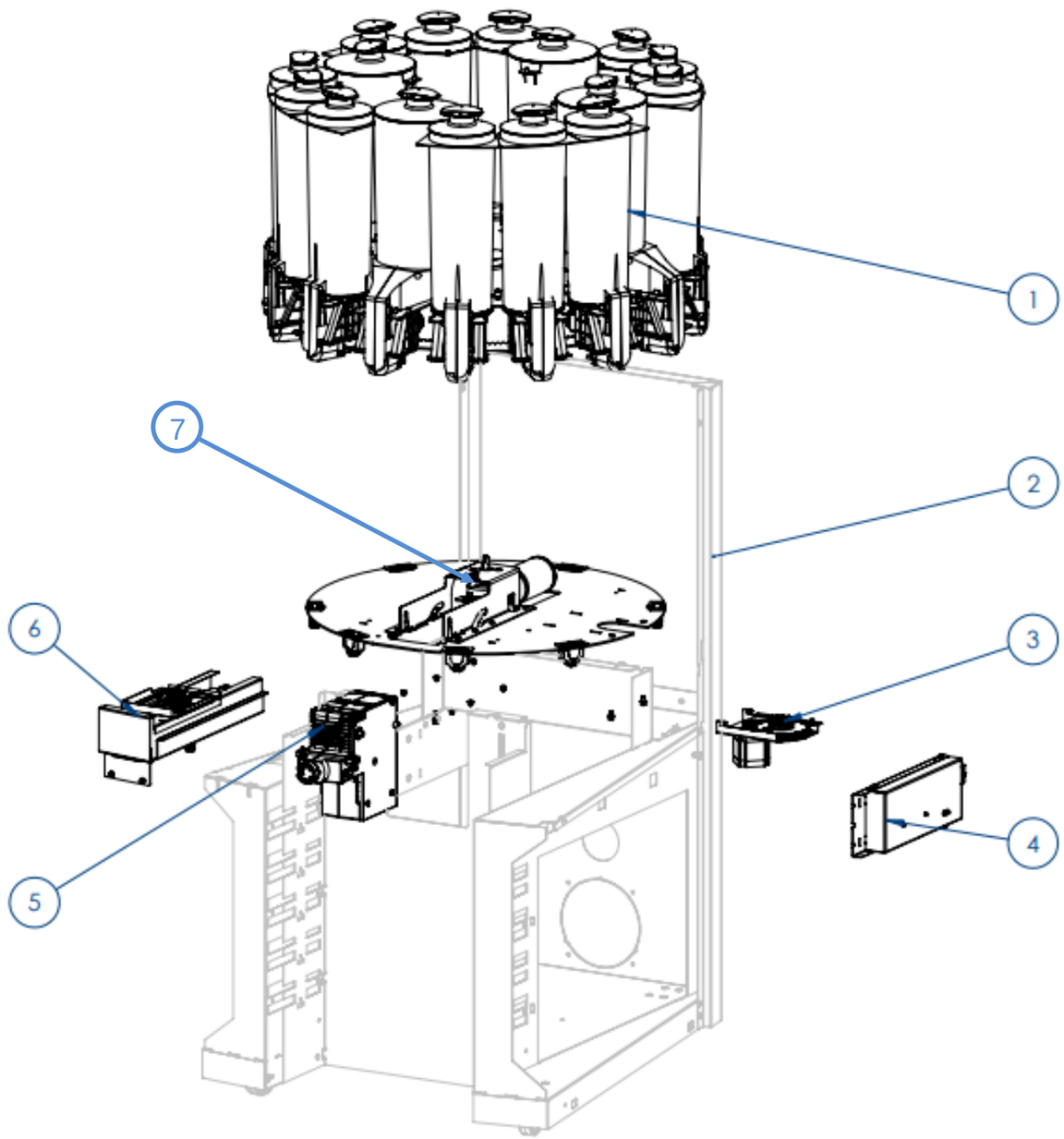

PARTS LIST			
ITEM	PART #	DESCRIPTION	REMARK
1		Turntable, 16C	Page 8420
1		Turntable, 24C	Page 8420
1		Turntable, 32C	Page 8420
2		Main frame	Page 8703
3	FM300207-SP	Turn table motor, compl.(set 1pc) E4	Page 8707
4	FM300213-SP	Power supply module CE/UL 150 W	Page 8531 -A
4	FM300214-SP	Power supply module ASIA 150 W	Page 8531 -B
5	1821281-SP	XDM with SOM	
5	2810152-SP	XDM	
5	2810153-SP	XDM with TICK	
6		Motorised Brush unit	Page 8706
7		Agitation unit	Page 8421

8421 Agitation Unit

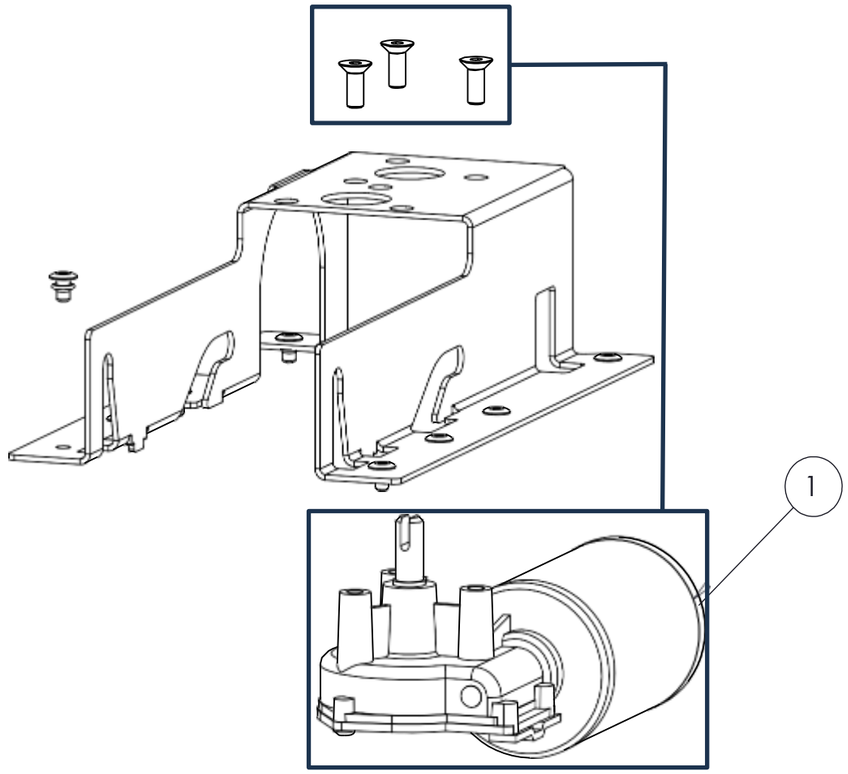

PARTS LIST			
ITEM	PART #	DESCRIPTION	REMARK
1	1821300-SP	Motor, agitation	

8703 Main frame

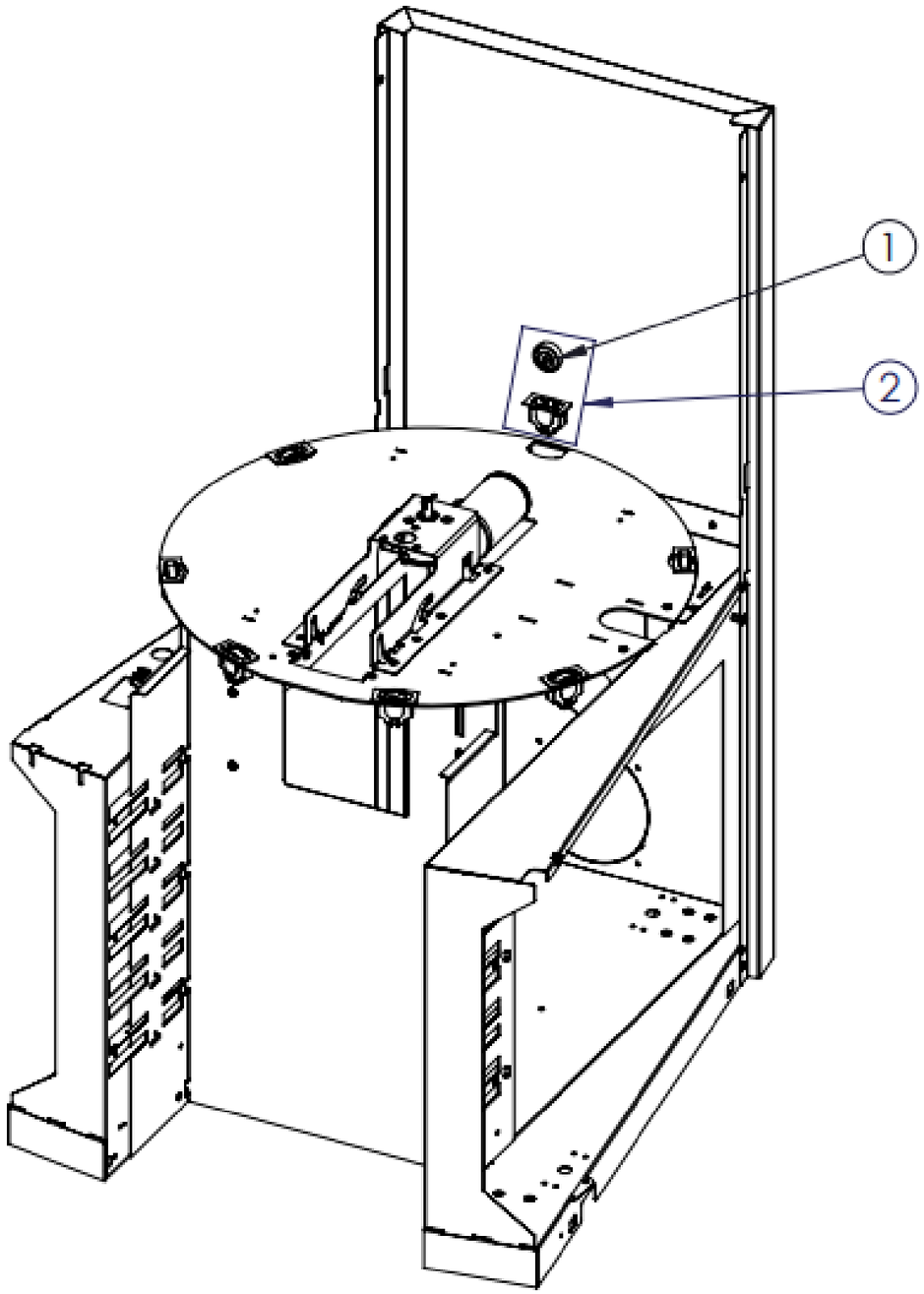

PARTS LIST			
ITEM	PART #	DESCRIPTION	REMARK
1	1862422-SP	Wheel,traversing,centric,35mm	
2	1819762-SP	Wheel Transversing With Wheel Cup (Set of 8)	

8330 XDM 1821281-SP

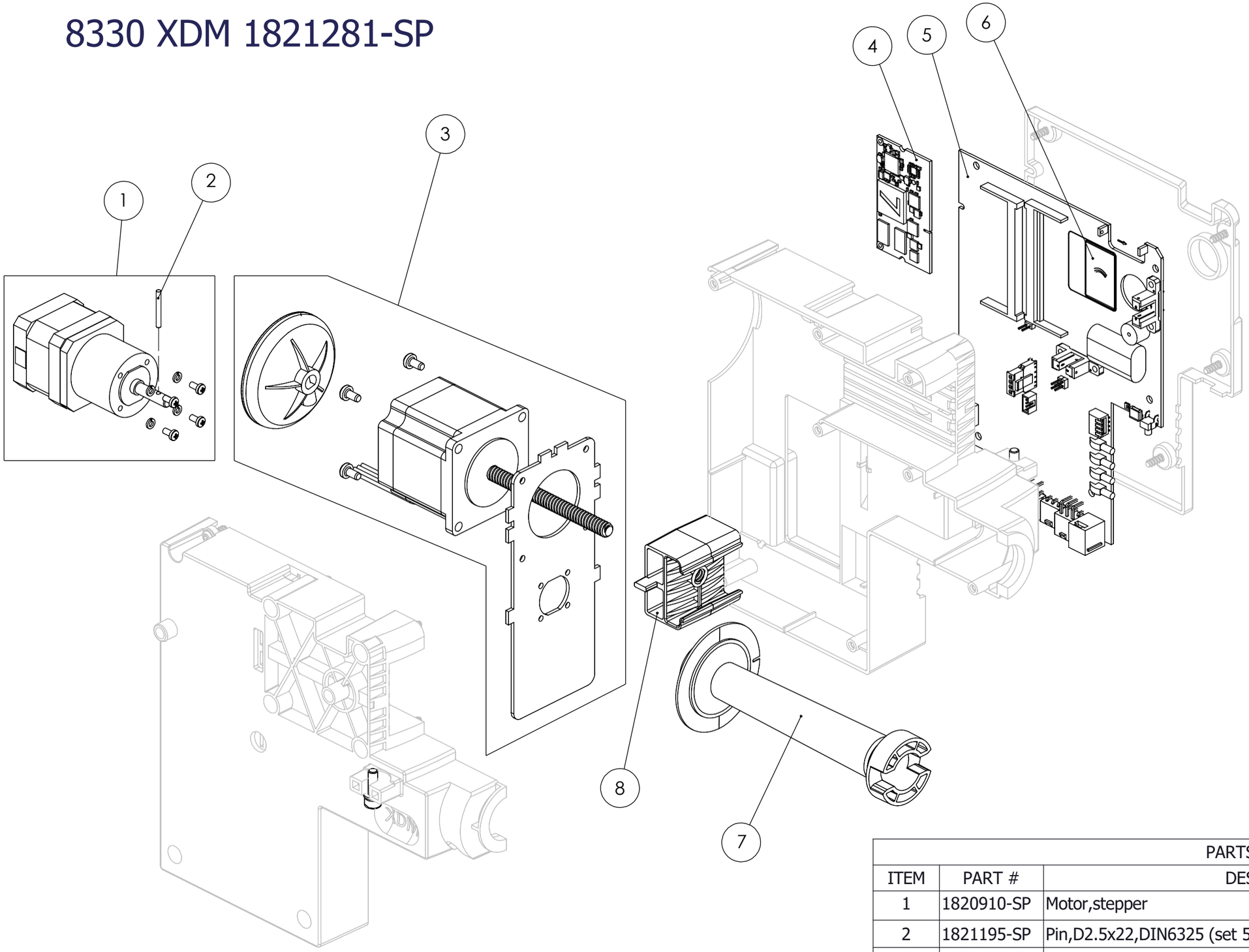

PARTS LIST			
ITEM	PART #	DESCRIPTION	REMARK
1	1820910-SP	Motor,stepper	
2	1821195-SP	Pin,D2.5x22,DIN6325 (set 5pcs)	
3	1820855-SP	Motor, stepper(set 1pc)	
4	1865660-SP	SystemOnModule(SOM)	
5	1820519-SP	PCB,XDM	
6	1865665-SP	WIFI Antena	
7	1820568-SP	Actuator,valve,XDM	
8	1820619-SP	Gripper	

8706 Motorised Brush Unit

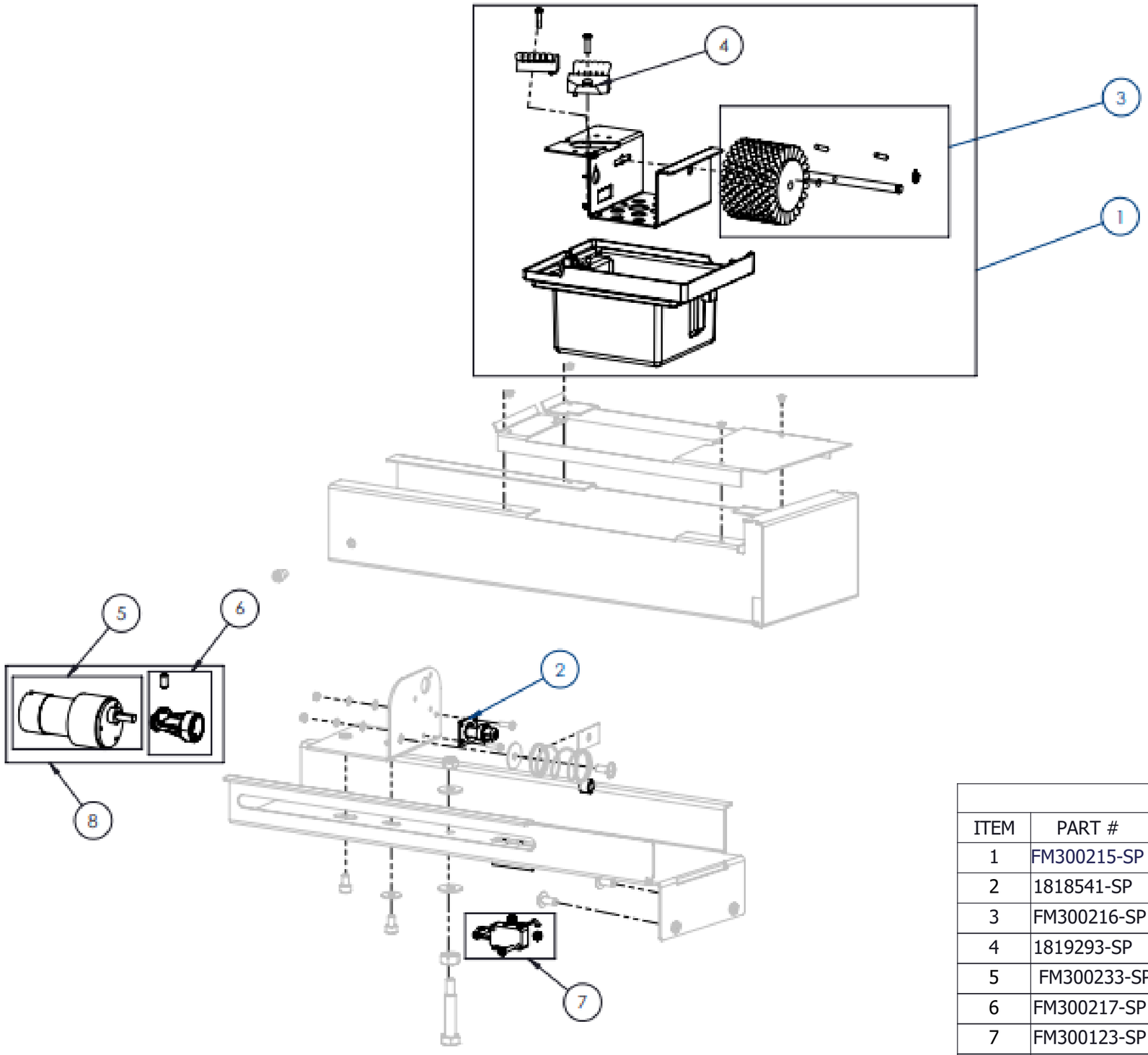

PARTS LIST			
ITEM	PART #	DESCRIPTION	REMARK
1	FM300215-SP	Container and brush(set 1pc) E4	
2	1818541-SP	Latch,push-in/out	
3	FM300216-SP	Brush(set 1pc)	
4	1819293-SP	Bristle Wiper(5set of 2 brush)	
5	FM300233-SP	Motor,Brush,micro,RH158-24-200	
6	FM300217-SP	coupling,fork,brush (Set 1 pc)	
7	FM300123-SP	Limit switch (Teknic MS 31)	
8	FM300350-SP	Motorized Brush kit	

8420 Turntable

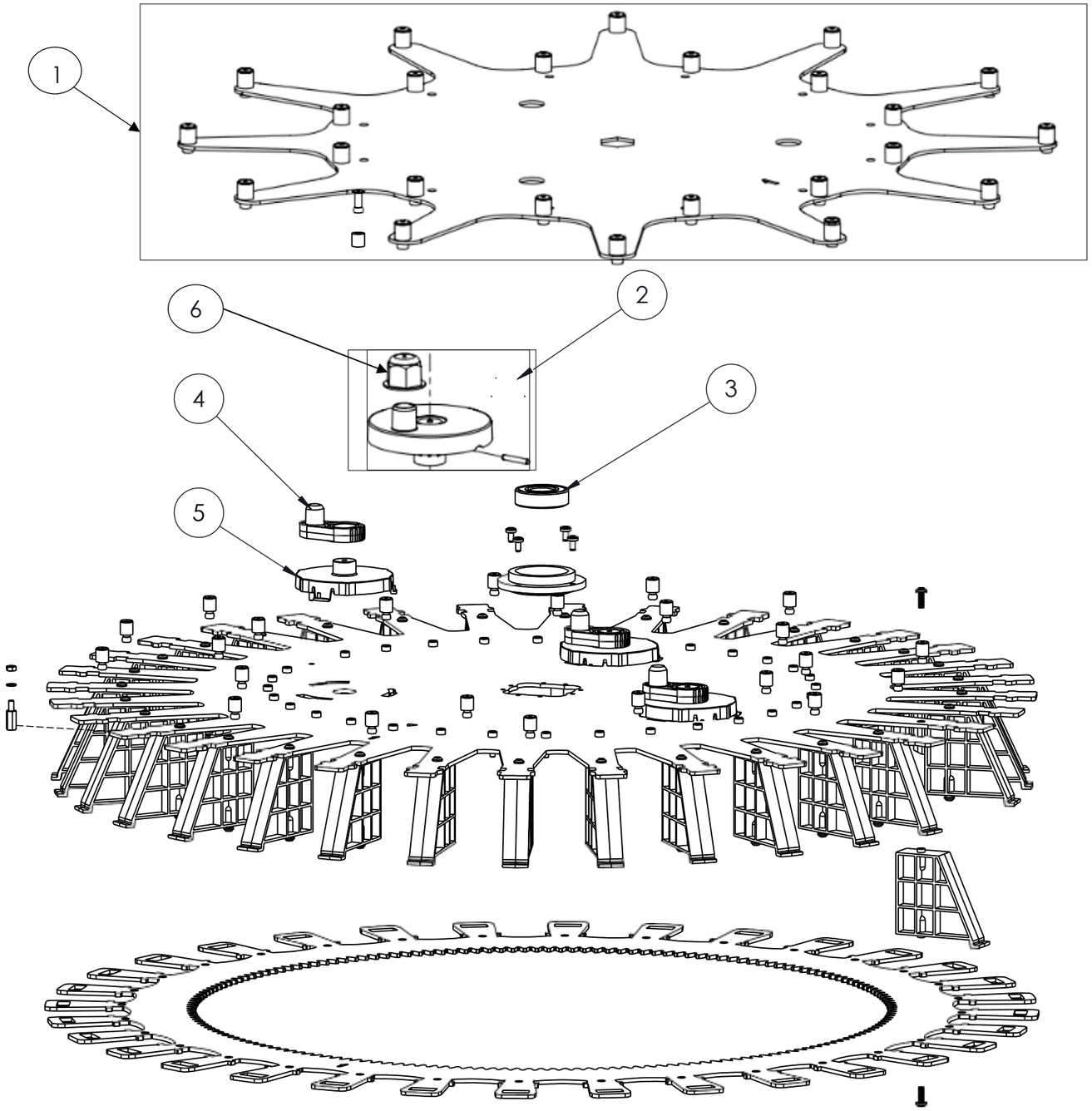

PARTS LIST			
ITEM	PART #	DESCRIPTION	REMARK
1		Plate , Agitation	Page 8708
2	1820869-SP	Agitation,crank (2 pcs)	
3	1818784-SP	Bearing 6004ZZ	
4	1816579-sp	Agitation plate supp,set(3pcs)	
5	1818800-SP	Agitation,disc(set 3pcs)	
6	1819210-SP	Bearing Agitation (100 Sets)	

8708 Agitation plate

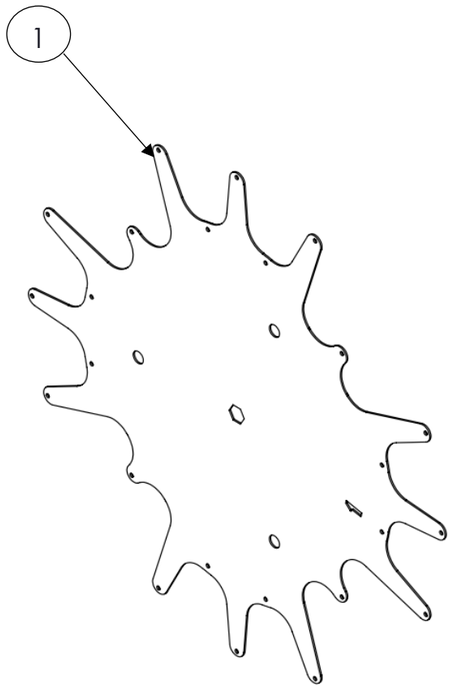

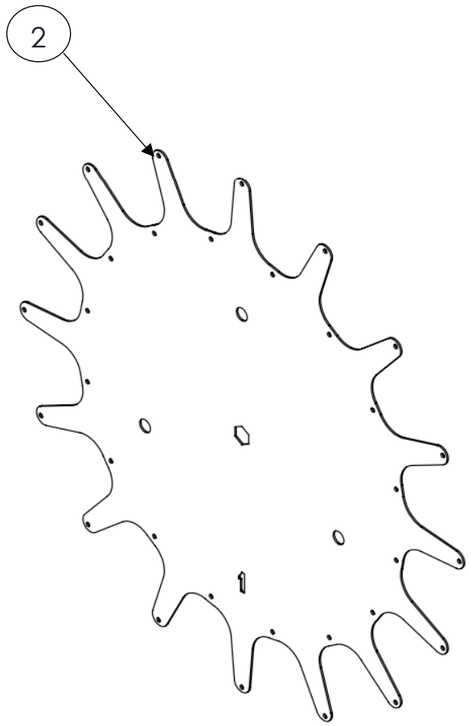

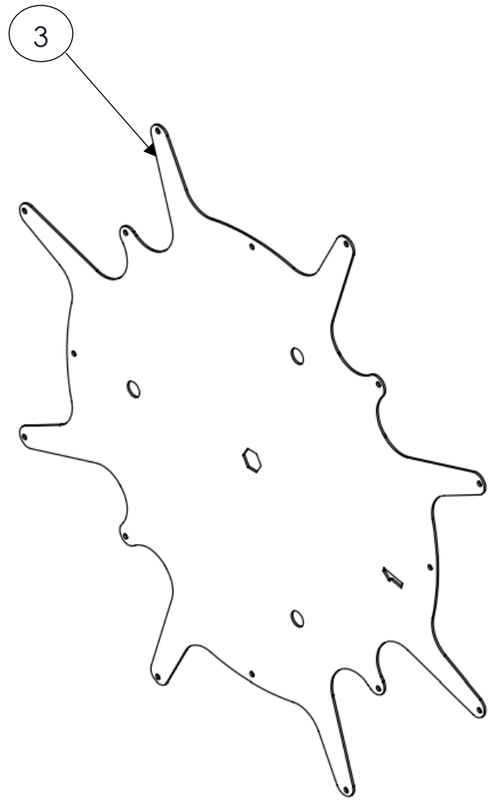

PARTS LIST			
ITEM	PART #	DESCRIPTION	REMARK
1	1821193-SP	Plate, Agitation	
2	1821194-SP	Plate, Agitation	
3	FM300194-SP	Plate,Agitation,4X1.3 8X2.3 4X4.6	

8531-A Power supply module CE/UL FM300213-SP

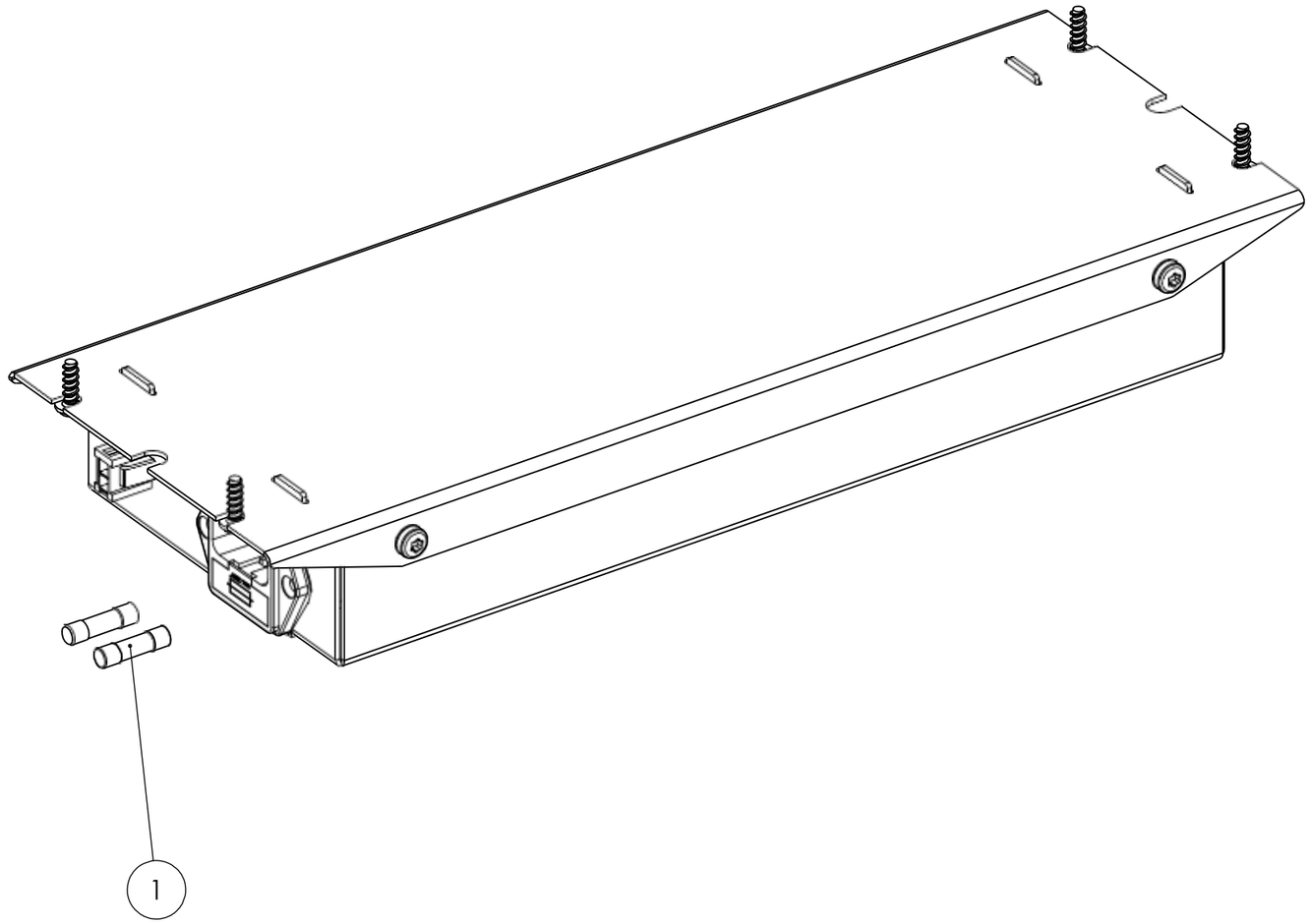

PARTS LIST			
ITEM	PART #	DESCRIPTION	REMARK
1	1819050-SP	Fuse,5AT,250V(set 10pcs)	

8531-B Power supply module ASIA FM300214-SP

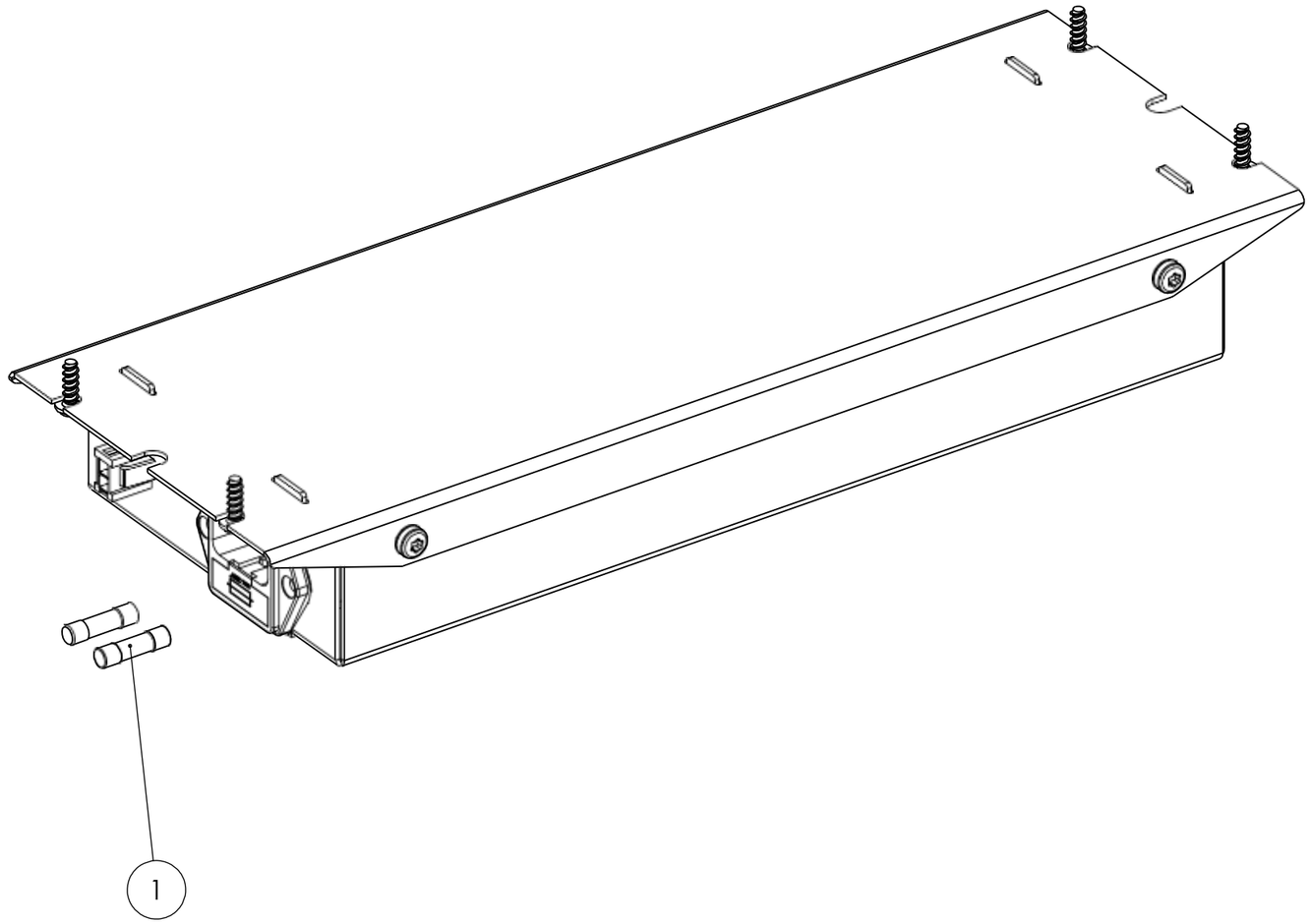

PARTS LIST			
ITEM	PART #	DESCRIPTION	REMARK
1	1819050-SP	Fuse,5AT,250V(set 10pcs)	

8310 Canisters

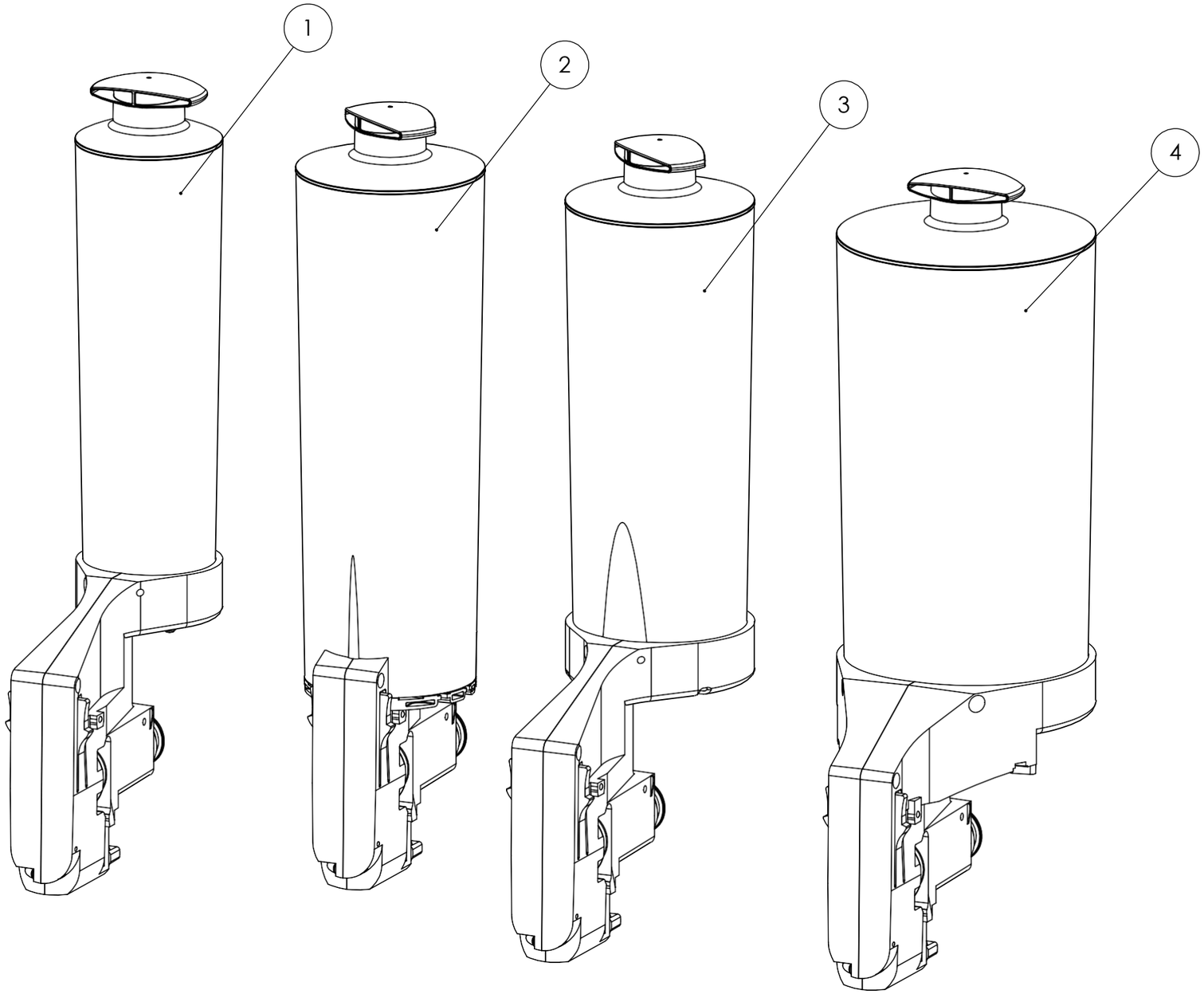

	ITEM	DESCRIPTION	43 ml (T30)	REMARK
SOLVENT	1	Canister 1.3L	1821227-SP	Page 8311
	2	Canister 2.3L	1821228-SP	Page 8312
	3	Canister 2.3L, Inner	1821229-SP	Page 8313
	4	Canister 4.6L	1821230-SP	Page 8314

8311 Canister 1.3L

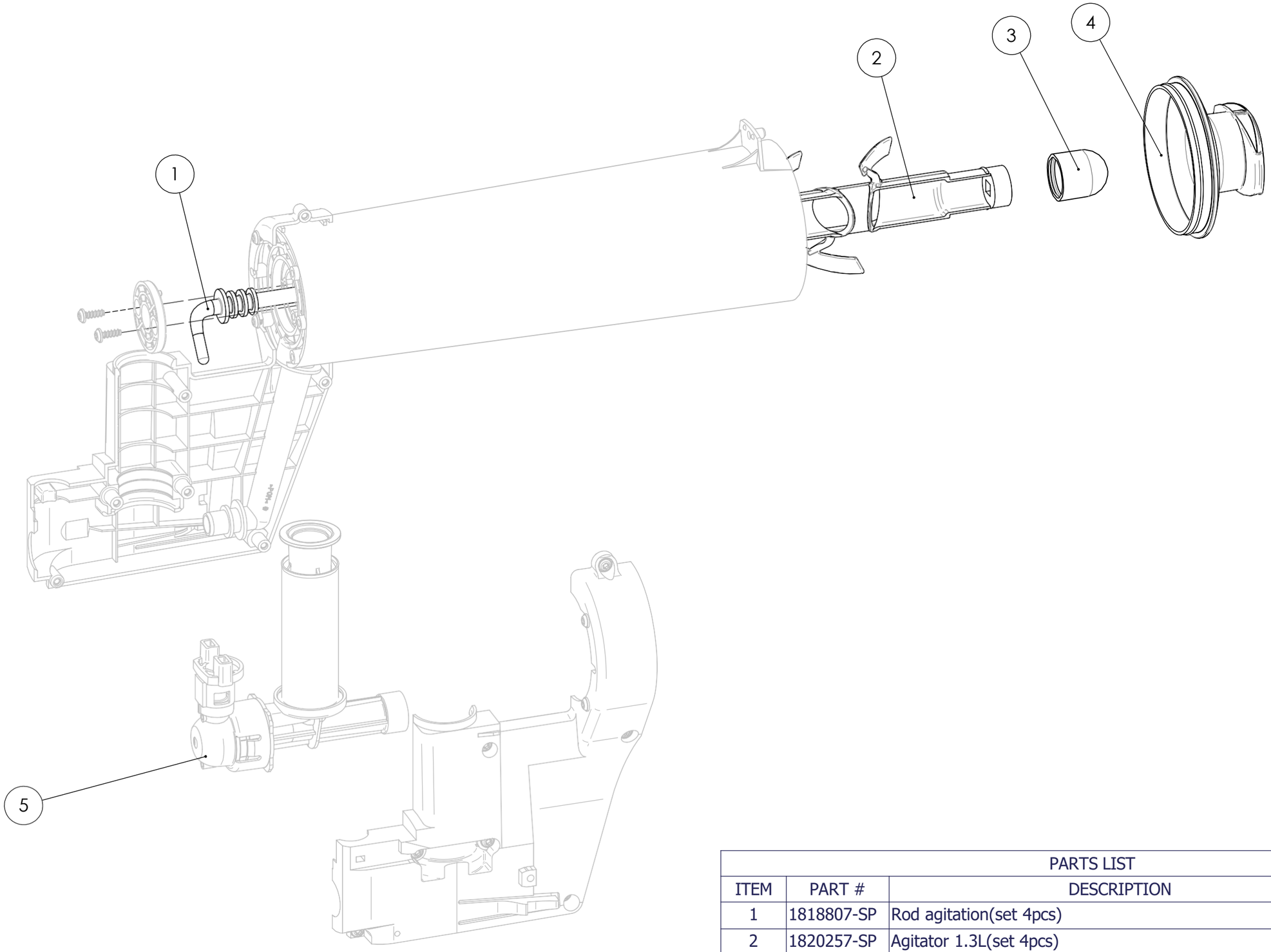

PARTS LIST			
ITEM	PART #	DESCRIPTION	REMARK
1	1818807-SP	Rod agitation(set 4pcs)	
2	1820257-SP	Agitator 1.3L(set 4pcs)	
3	1818815-SP	Cover agitator(set 16pcs)	
4	1820267-SP	Canister lid 1.3L(set 4pcs)	
5		Pump mechanics	Page 8315

8312 Canister 2.3L

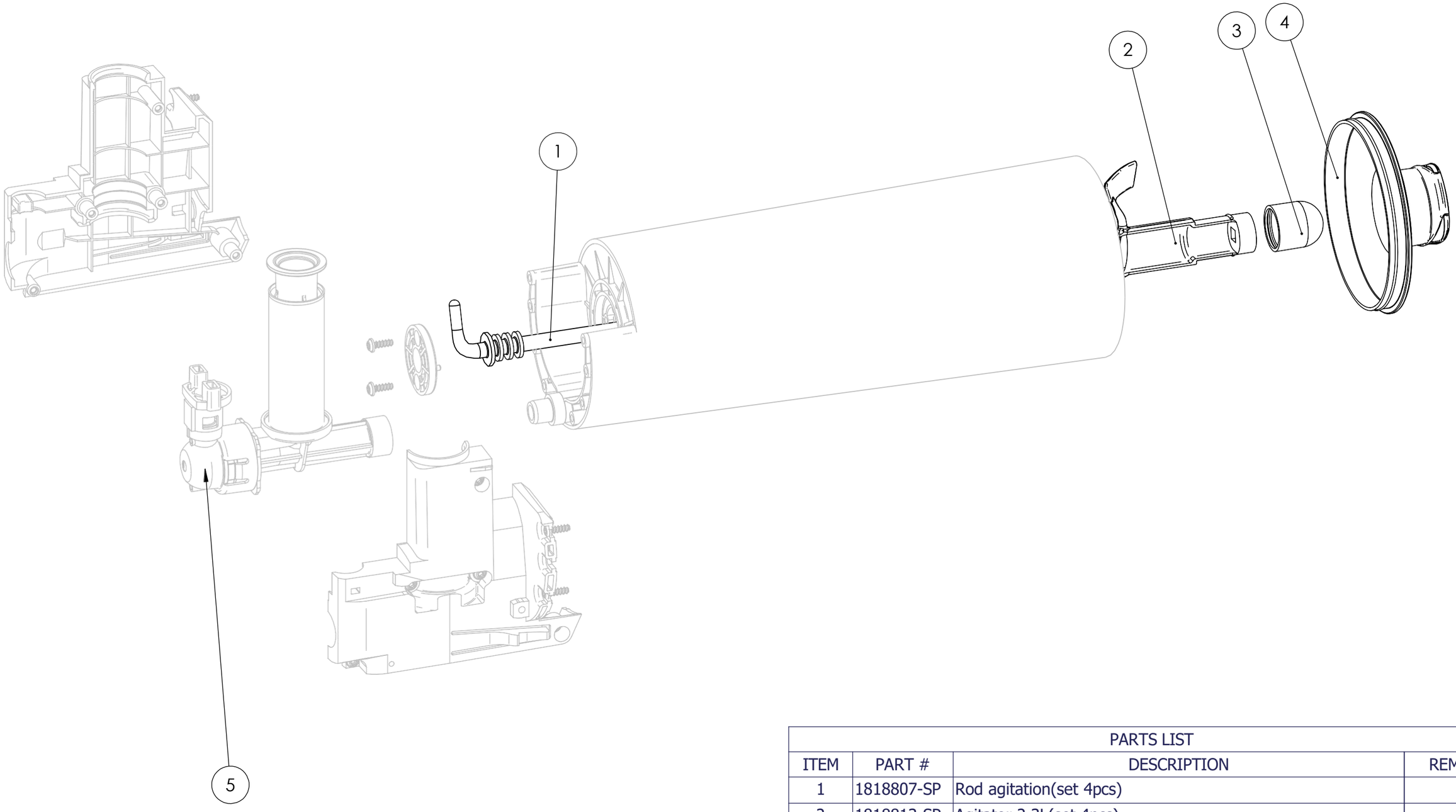

PARTS LIST			
ITEM	PART #	DESCRIPTION	REMARK
1	1818807-SP	Rod agitation(set 4pcs)	
2	1818813-SP	Agitator 2.3L(set 4pcs)	
3	1818815-SP	Cover agitator(set 16pcs)	
4	1818808-SP	Canister lid 2.3L(set 4pcs)	
5		Pump mechanics	Page 8315

8313 Canister 2.3L, Inner

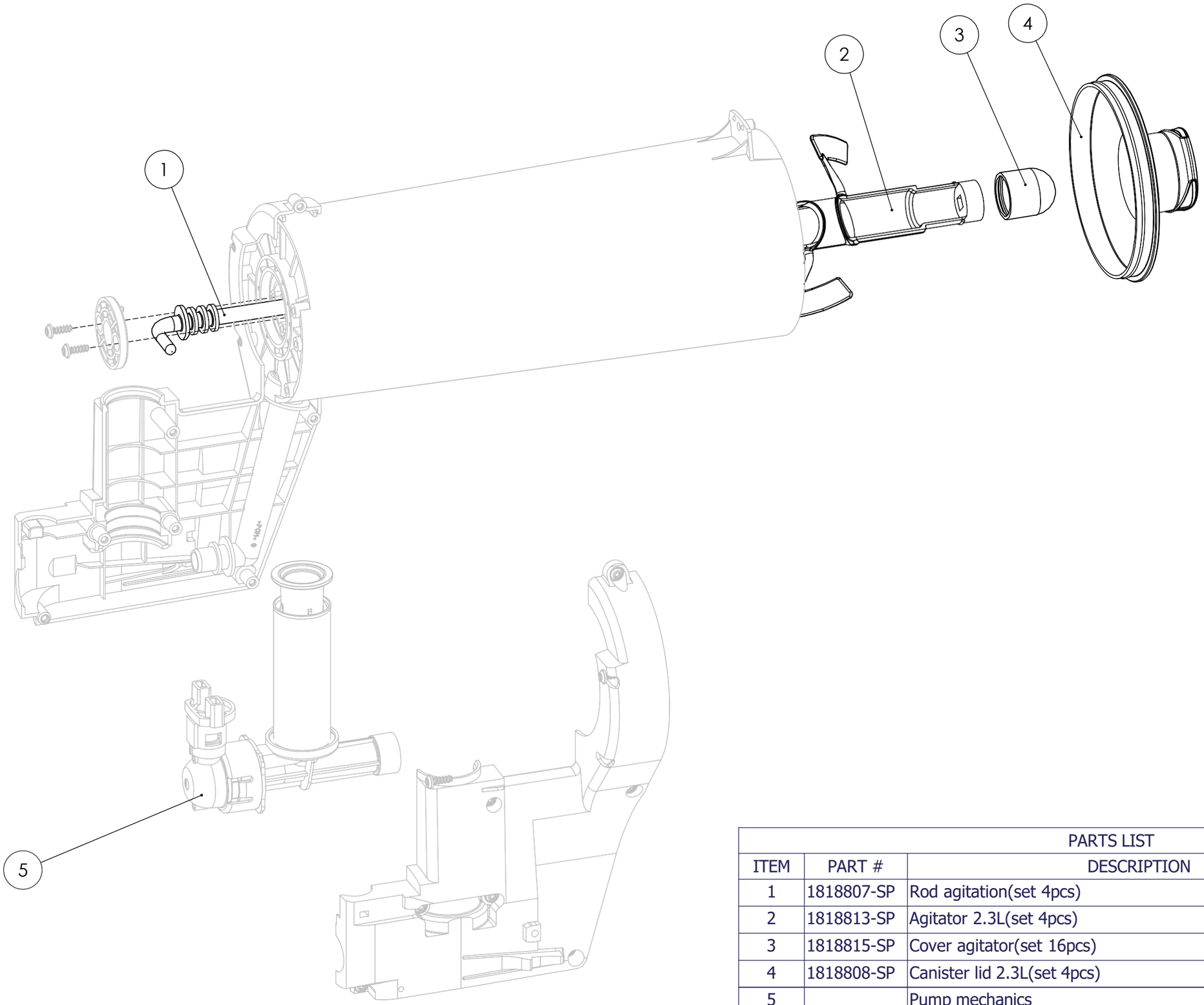

PARTS LIST			
ITEM	PART #	DESCRIPTION	REMARK
1	1818807-SP	Rod agitation(set 4pcs)	
2	1818813-SP	Agitator 2.3L(set 4pcs)	
3	1818815-SP	Cover agitator(set 16pcs)	
4	1818808-SP	Canister lid 2.3L(set 4pcs)	
5		Pump mechanics	Page 8315

8314 Canister 4.6L

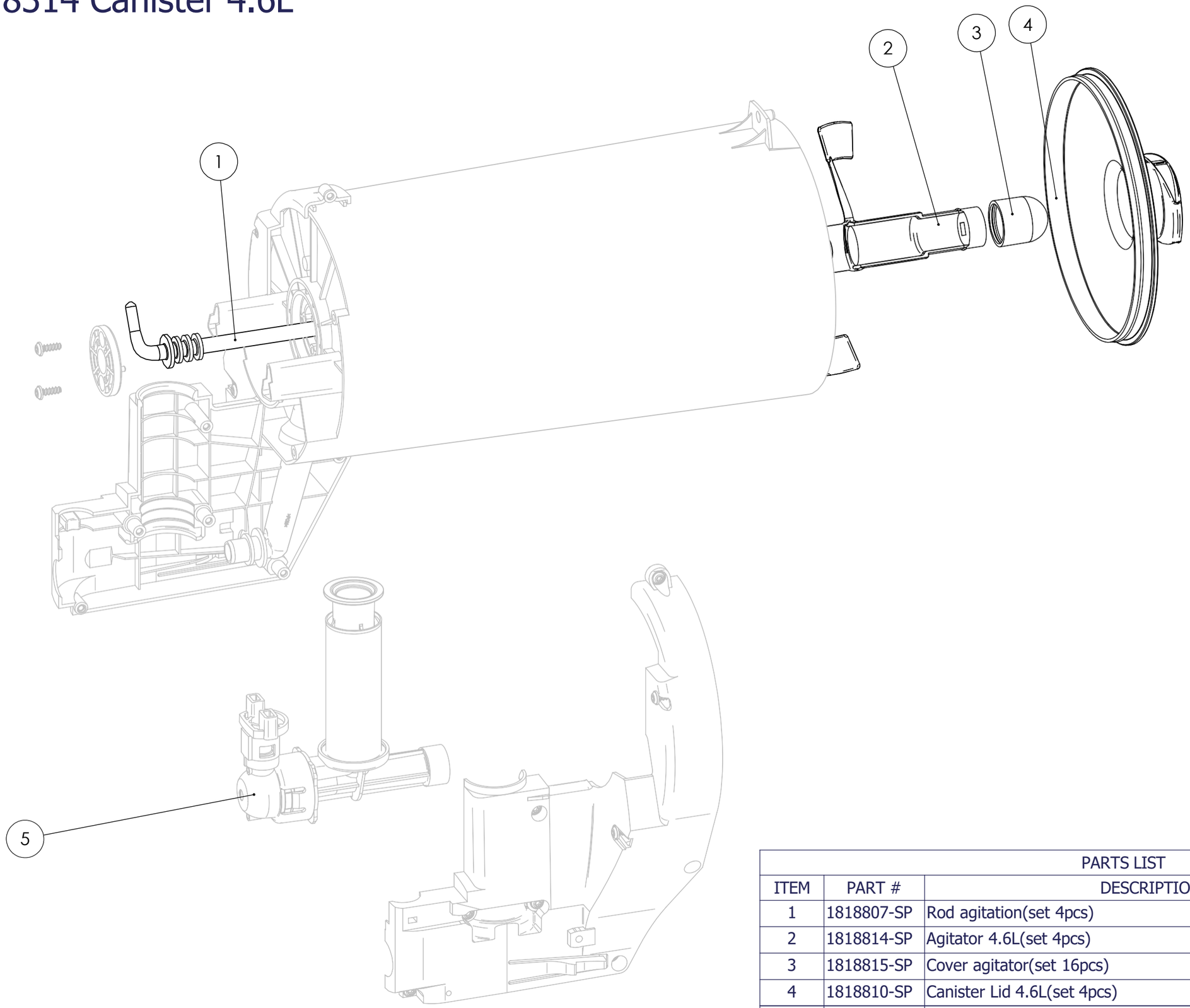

PARTS LIST			
ITEM	PART #	DESCRIPTION	REMARK
1	1818807-SP	Rod agitation(set 4pcs)	
2	1818814-SP	Agitator 4.6L(set 4pcs)	
3	1818815-SP	Cover agitator(set 16pcs)	
4	1818810-SP	Canister Lid 4.6L(set 4pcs)	
5		Pump mechanics	Page 8315

8315 Pump mechanics

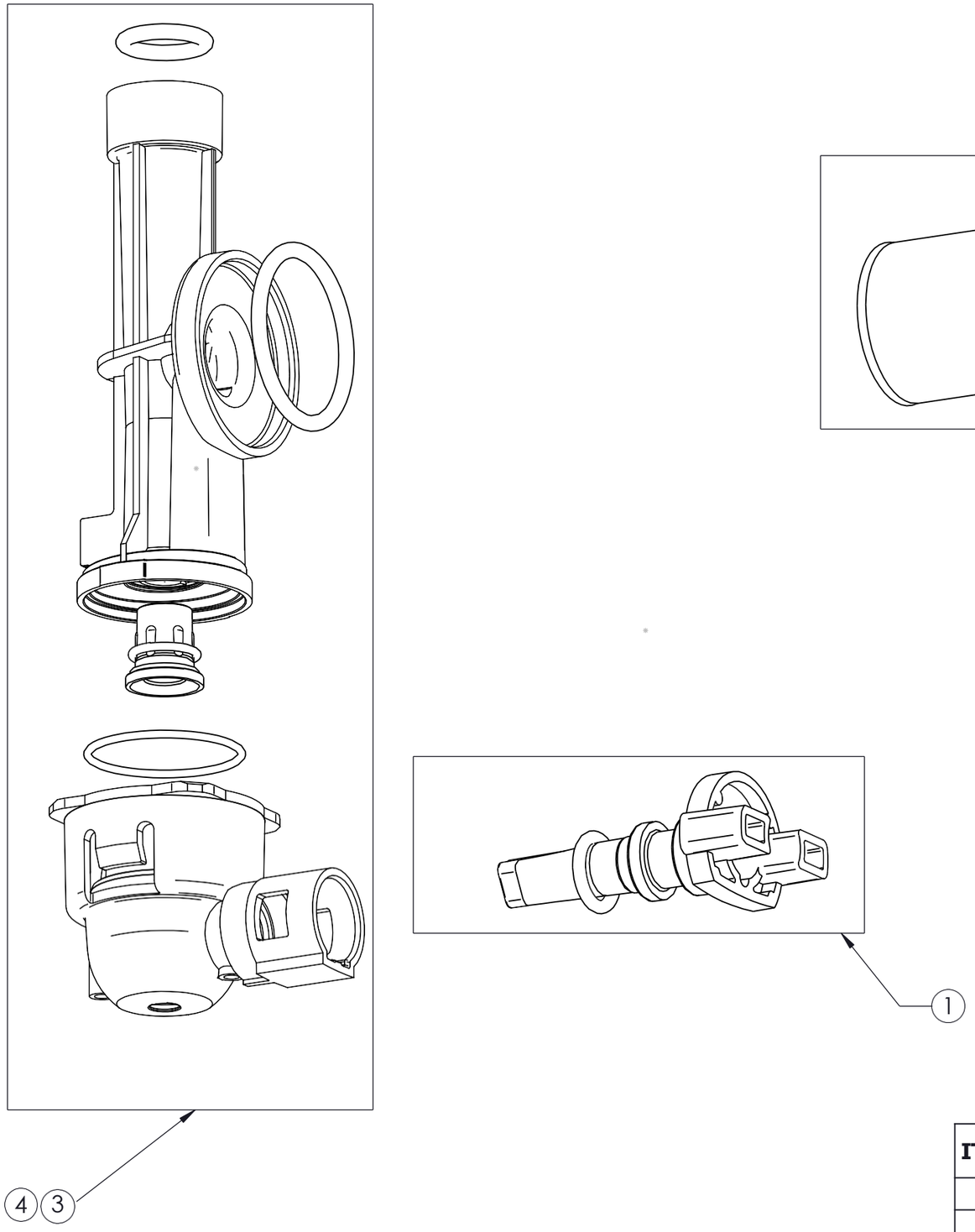

ITEM	DESCRIPTION	43 ml (T30)	REMARK
1	Valve,Lever	1820555-SP	
2	Piston assy (T..) (set 4pcs)	1821284-SP	
3	Pump Housing .. mm Asm. Deco	2810180-SP	Water
4	Pump Housing .. mm Asm. Solv.	2810182-SP	Solvent

8707 TT-drive unit gear FM300207-SP

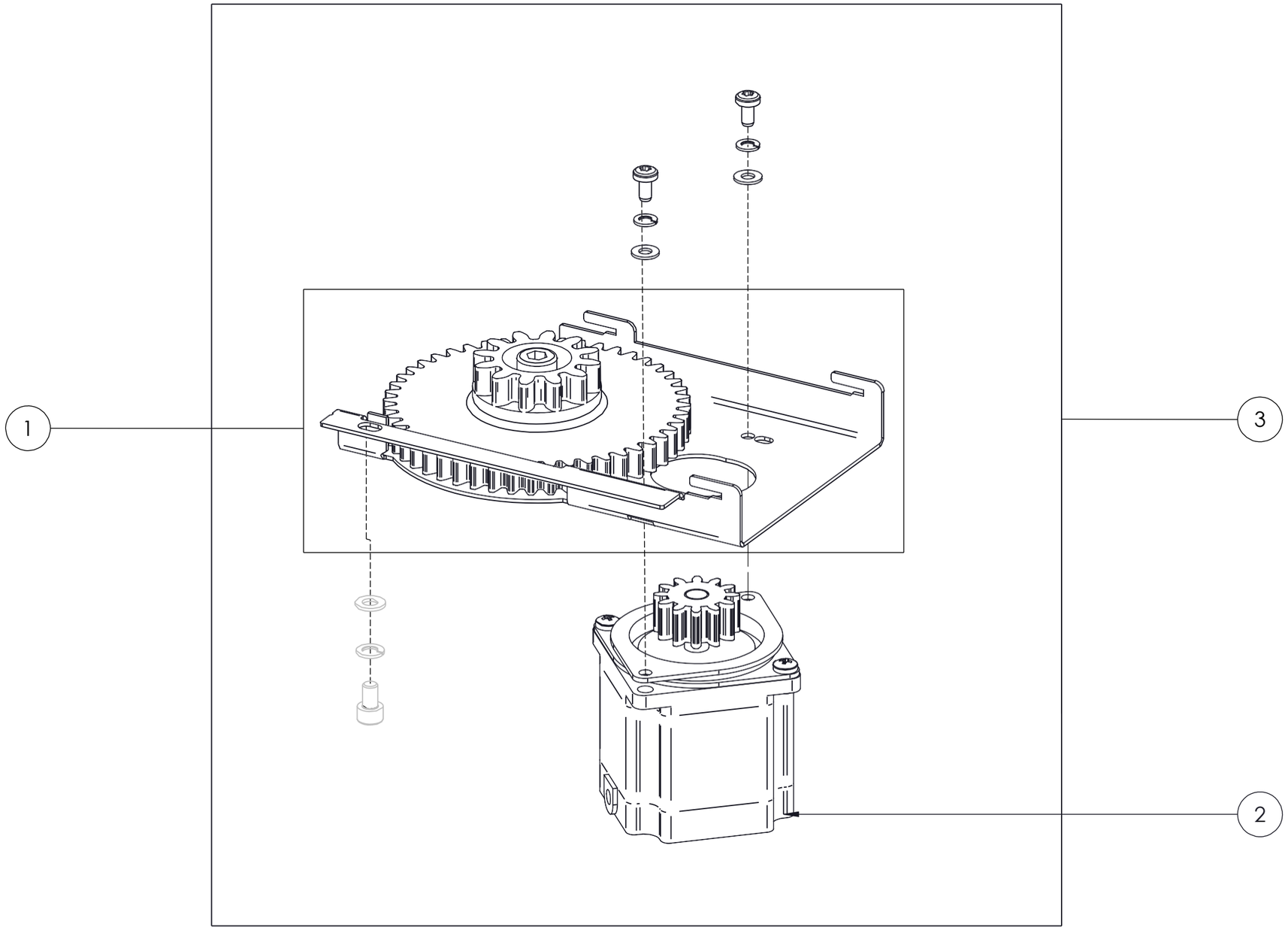

PARTS LIST			
ITEM	PART #	DESCRIPTION	REMARK
1	FM300206-SP	Gear with bearing(set 1pc)	
2	1818821-SP	Motor,turntable	
3	FM300207-SP	Turn table motor, compl.(set 1pc) E4	

7470 Heating module 1819274-SP

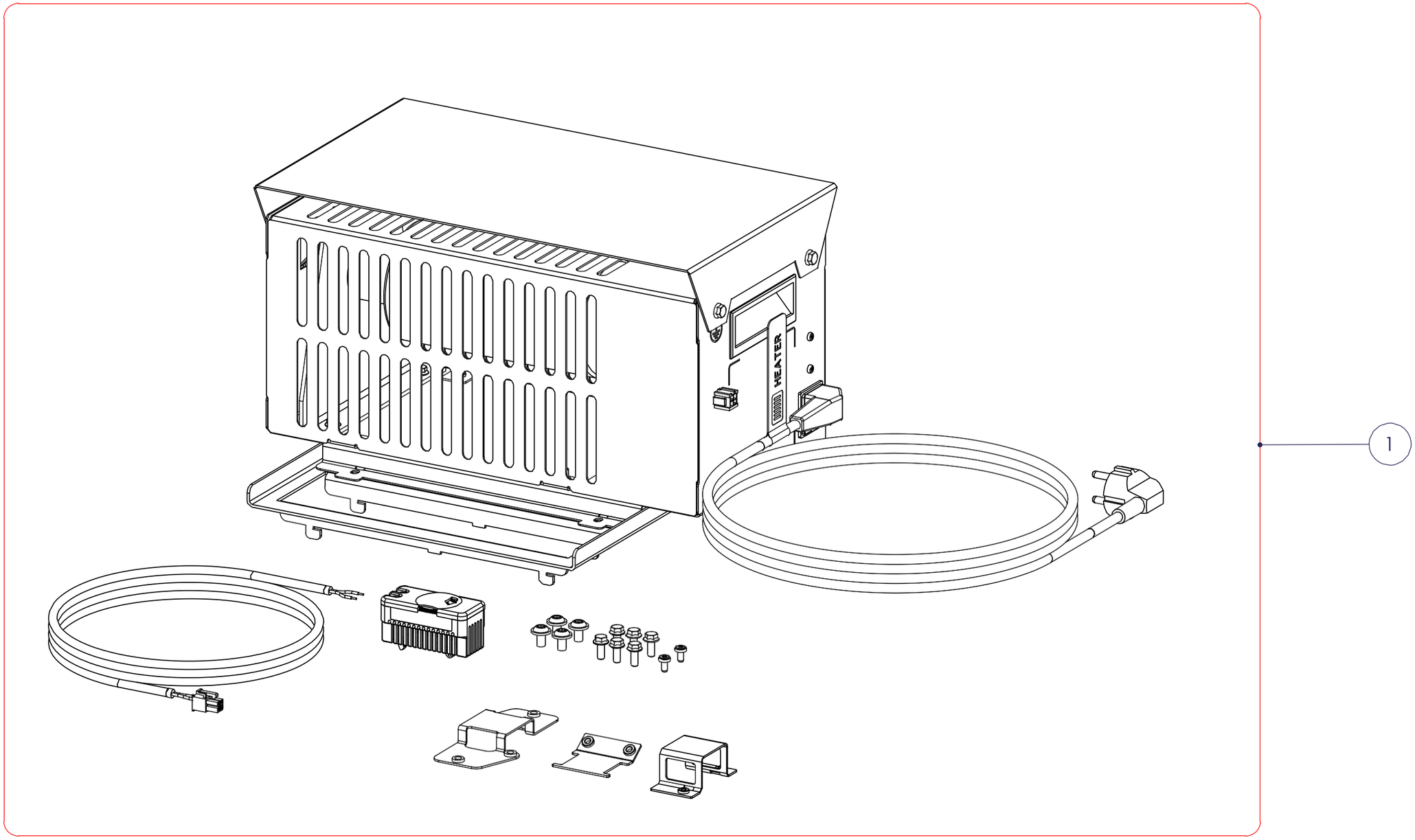

PARTS LIST				
ITEM	**PART #**	**DESCRIPTION**	**REMARK**	**QTY**
1	1819274-SP	Heating module		